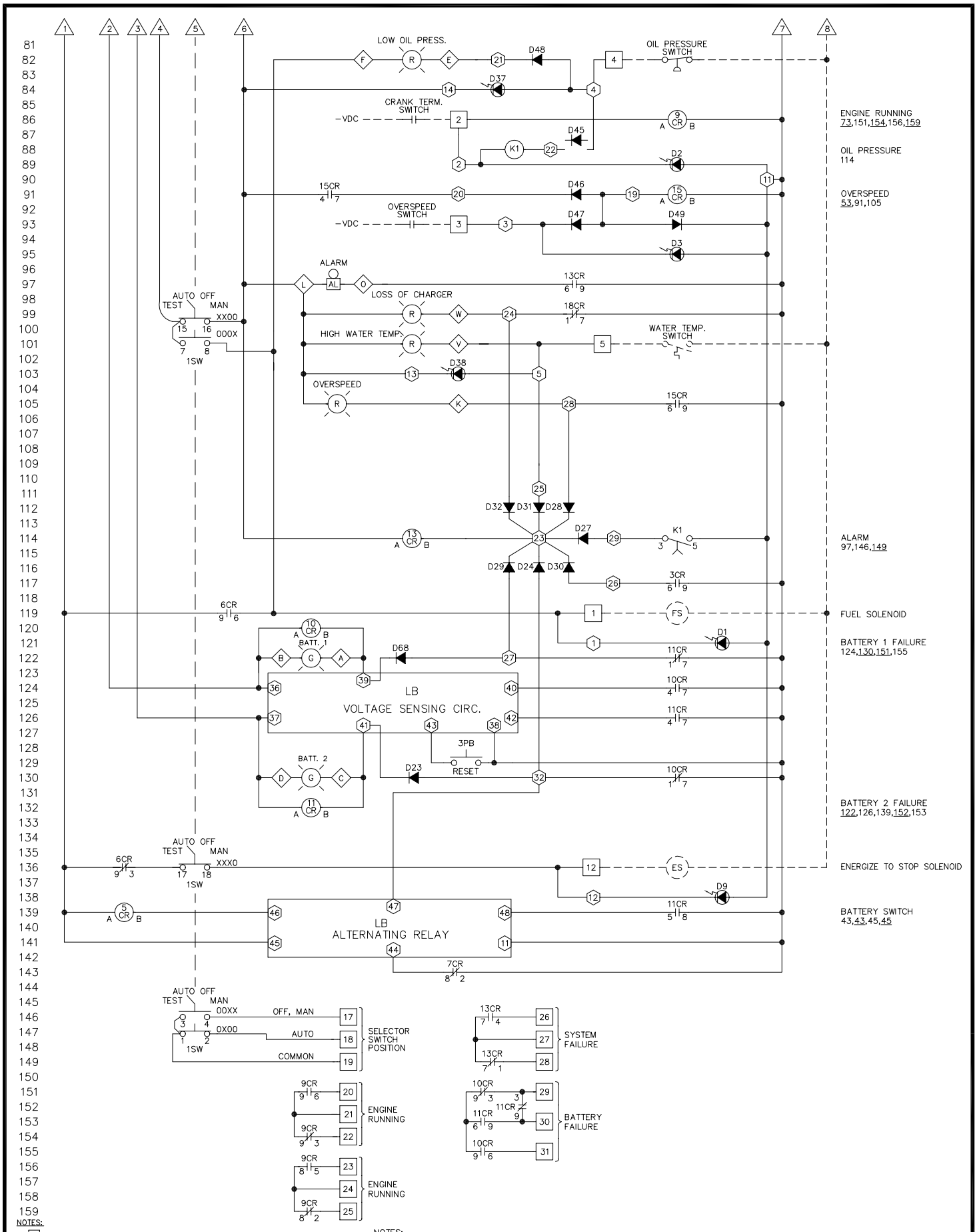

NOTES:

□ – DENOTES TERMINALS ON 1T LOCATED AT FRONT BOTTOM OF RELAY PANEL.

◇ – DENOTES TERMINALS ON 2T LOCATED AT FRONT TOP OF RELAY PANEL.

(3T) – DENOTES TERMINALS ON 3T LOCATED AT CENTER OF RELAY PANEL.

(4T) – DENOTES TERMINALS ON 4T LOCATED AT FRONT BOTTOM OF RELAY PANEL.

⬡ – DENOTES TERMINALS ON LOGIC BOARD, (LB).

△ – DENOTES MATCH POINT ON SHEET 1 OF 2.

NOTES:

THERE IS A DIODE AND RESISTOR IN SERIES WITH EACH LED, NOT SHOWN ON SCHEMATIC.

DRAWN	SR	2-12-99	METRON, INC. DENVER, CO.
CHECK	K.H.	2-12-99	
APPD	K.S.	2-12-99	

SCHEMATIC
MODEL FD2, POSITIVE GROUND
ENGINE DRIVEN FIRE PUMP CONTROLLER

OPTIONS: CS33285C

SCALE N.T.S. SHEET 2 OF 2